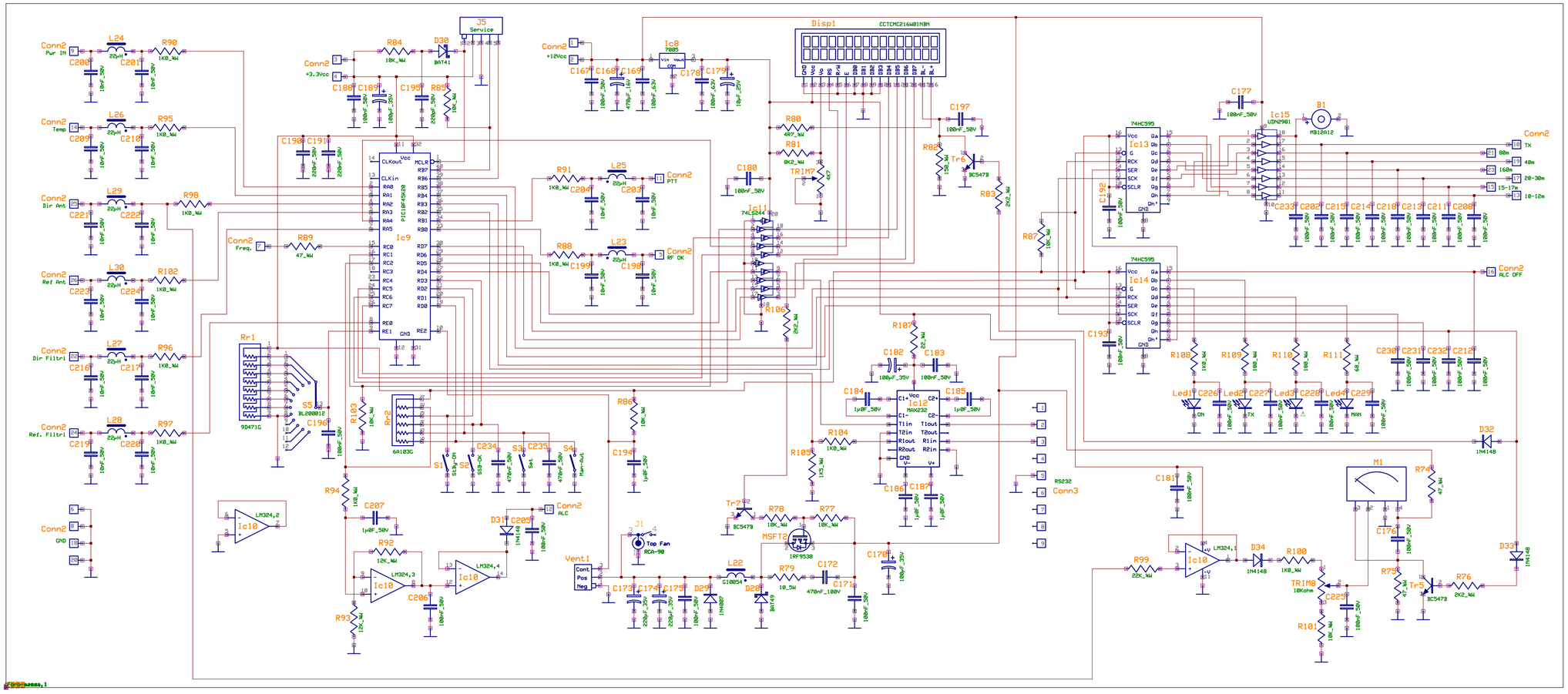

Conn2
Pwr IN
Temp
Dir Ant
Ref Ant
Dir Filtri
Ref. Filtri
GND
Freq.
+3.3Vcc
+12Vcc
PTT
RF OK
Vent1
Top Fan
RCA-90
Disp1
CCTCMC216W01NBN
Ic9
PIC18F45K20
Ic8
7805
Ic11
74LS244
Ic12
MAX232
Ic13
74HC595
Ic14
74HC595
Ic15
UDN2901
B1
MB12A12
M1
Conn3
RS232
Rr1
9D471G
Rr2
6A103G
S5
BL200012
S1
S2
S3
S4
Set
Man-Ant
Ic10
LM324,2
LM324,3
LM324,4
LM324,1
J5
Service
J1
Tr7
BC547B
MSFT2
IRF9530
Tr6
BC547B
Tr5
BC547B
Tr4
BC547B
TRIM7
TRIM8
10Kohm
Led1
Led2
Led3
Led4
ON
TX
MAN
Conn2
TX
40m
160m
20-30m
15-17m
10-12m
ALC OFF
ALC